Ⓓ Ⓖⓑ Ⓕ Ⓡⓤ 6000-2330-0000-1XX **23300-2018 V102** 02/2018

S+S REGELTECHNIK

PREMASREG® **DS1**

Ⓓ Bedienungs- und Montageanleitung

Differenzdruckschalter für Luft,
mit Montagewinkel, incl. Anschluss-Set

Ⓖⓑ Operating Instructions, Mounting & Installation

Differential pressure switches for air,
with mounting angle, incl. connection set

Ⓕ Notice d'instruction

Pressostat différentiel pour air,
avec équerre de montage, y compris kit de raccordement

Ⓡⓤ Руководство по монтажу и обслуживанию

Реле давления дифференциальное для воздуха,
с монтажным уголком, вкл. комплект соединительных деталей

DS 1
mit Montagewinkel
including mounting angle
avec équerre de montage
с монтажным уголком

S+S REGELTECHNIK

S+S REGELTECHNIK GMBH
PIRNAER STRASSE 20
90411 NÜRNBERG / GERMANY

FON +49 (0) 911 / 519 47-0
FAX +49 (0) 911 / 519 47-70

mail@SplusS.de
www.SplusS.de

MADE IN GERMANY

Herzlichen Glückwunsch!
Sie haben ein deutsches Qualitätsprodukt erworben.

Congratulations!
You have bought a German quality product.

Félicitations!
Vous avez fait l'acquisition d'un produit allemand de qualité.

Примите наши поздравления!
Вы приобрели качественный продукт, изготовленный в Германии.

PREMASREG® DS1

S+S REGELTECHNIK

Maßzeichnung
Dimensional drawing
Plan coté
Габаритный чертеж

DS 1
mit Montagewinkel
including mounting angle
avec équerre de montage
с монтажным уголком
DS 1-MW-Z

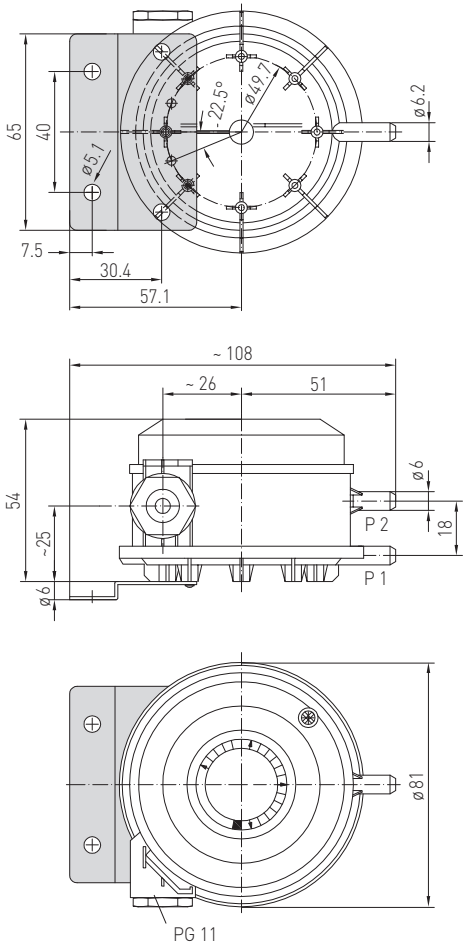

The mechanical differential pressure switch / differential pressure monitor **PREM**ASREG® **DS 1** with metal angle is used for monitoring above-atmospheric, differential, and below-atmospheric pressures of air and gaseous, non-aggressive media in air ducts, ventilation intake or exhaust devices, as a flow monitor, as a pressure difference detector or pressure monitor for flow detection at electric heating registers, for monitoring V-belts and filters, as air pressure deficiency protection, for monitoring fans and air dampers, or as a limit value controller. The switchpoint is adjusted using the internal precision scale. These instruments are factory-calibrated. The differential pressure DS 1 switch is supplied including connection set **ASD-06** (2 m connection hose, two pressure connection nipples, screws) and mounting angle **DS1-MW-Z**.

TECHNICAL DATA

Switching capacity: (Contact load)	5 (0.8) A, 250 V AC 4 (0.7) A, 30 V DC
Contact:	single-pole potential-free changeover contact, multi-layer contact, gold-plated (DDC compatible)
Pressure range:	see table, high adjustment accuracy due to individual laser-etched scale for each switch
Enclosure:	base: material PC (10 % GF), colour light grey (similar to RAL 7035), snap-on lid: material PC, transparent, cable gland PG 11 with strain relief
Temperature of medium:	–30…+85 °C
Membrane:	silicone, LSR (Liquid Silicon Rubber, tempered at +200 °C, non-outgassing, LABS-free, no emission of varnish-adhesion inhibiting substances), long-term stability of switching points due to trapezoidal bead membranes
Humidity:	< 90 % r. H., non-precipitating air
Electrical connection:	0.14 - 1.5 mm², via terminal screws on circuit board
Pressure connection:	P1 (+) for higher pressure P2 (–) for lower pressure Ø 6.2 mm (nipples)
Mounting:	**with metal angle DS 1-MW-Z** (included in the scope of delivery) (for other optional shapes, see table) Recommended mounting position: vertical (pressure connections downward) – factory setting; horizontal (cap up / down)
Protection class:	II (according to EN 60 730)
Protection type:	IP 54 with top cover (according to EN 60529)
Standards:	CE conformity, low-voltage directive 2014 / 35 / EU
Tests:	DVGW (according to DIN 1854), VDE 0630, EN 61058, directive on gas devices 2009 / 142 / EU, CE 0085 A P 0918
FUNCTION	Contact 1 - 2 breaks when pressure / differential pressure rises to the preset value. Contact 1 - 3 closes when pressure / differential pressure drops and can be used as signal contact.
ACCESSORIES	
ASD-06	Connection set (nipple straight) – (included in the scope of delivery)
DS1-MW-Z	Mounting angle (included in the scope of delivery)
DS1-MW-U	Mounting angle (optional), combination bracket for vertical or horizontal mounting
WS-04	Weather and sun protection hood, 130 x 180 x 135 mm, aus stainless steel

PREMASREG® **DS 1** – Differential pressure switches with mounting angle, *Premium*

Type / WG02	Pressure range (adjustable)	Operating Difference approx.	Max. Pressure	Item No.
DS 1				**with mounting angle DS-MW-Z**
DS-106	20…300 Pa (0.2…3.0 mbar)	0.1 mbar ± 15 %	5000 Pa (50 mbar)	1302-4011-0000-000
DS-106 A	50…500 Pa (0.5…5.0 mbar)	0.2 mbar ± 15 %	5000 Pa (50 mbar)	1302-4012-0000-000
DS-106 B	100…1000 Pa (1.0…10.0 mbar)	0.4 mbar ± 15 %	5000 Pa (50 mbar)	1302-4013-0000-000
DS-106 C	500…2000 Pa (5.0…20.0 mbar)	1.0 mbar ± 15 %	5000 Pa (50 mbar)	1302-4014-0000-000
DS-106 D	1000…5000 Pa (10.0…50.0 mbar)	2.5 mbar ± 15 %	7500 Pa (75 mbar)	1302-4015-0000-000
Accessories				
DS-MW-Z	Sheet steel **mounting angle** in **Z**-form **(included in the scope of delivery)**			7100-0063-0000-000
DS-MW-L	Sheet steel **mounting angle** in **L**-form			7100-0063-1000-000
DS-MW-U	Sheet steel **mounting angle** in **U**-form			7100-0060-9000-000
ASD-06	**Connection set (included in the scope of delivery),** consisting of 2 connection nipples (straight) made of ABS, 2 m PVC hose, soft, and 4 tapping screws			7100-0060-3000-000
ASD-07	**2 connection nipples** (at 90 degree angle) made of plastic, ABS			7100-0060-7000-000
WS-04	**Weather and sun protection**, 130 x 180 x 135 mm, stainless steel			7100-0040-7000-000

Mounting diagram **DS 1**

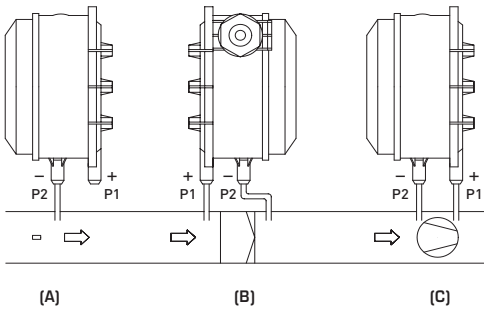

Connecting diagram **DS 1**

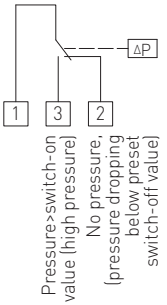

TYPES OF MONITORING:

(A) Below-atmospheric pressure:
P1 (+) is not connected but open against atmosphere
P2 (–) connected to inside of duct

(B) Filter:
P1 (+) connected upstream of filter
P2 (–) connected downstream of filter

(C) Ventilator:
P1 (+) connected downstream of ventilator
P2 (–) connected upstream of ventilator

Pressure connections at the pressure switch are marked with P1 (+) for higher pressure and P2 (–) for lower pressure.

Specifications regarding switching pressures relate to vertical mounting and it is recommended to install the connections downward.

In case of vertical mounting with pressure connections upward, the switch-on value increases by 0.2 mbar.

Connection P1 for
higher pressure or less below-atmospheric pressure.

Connection P2 for
lower pressure or more below-atmospheric pressure.

Electrical connections:

Contacts 1 - 2 break when pressure / differential pressure rises to the preset value.

Simultaneously, contacts 1 - 3 close and can be used as signal contact.

Connection **DS 1**

Conversion table for pressure values:

Unit =	bar	mbar	Pa	kPa	mH_2O
1 Pa	0.00001 bar	0.01 mbar	1 Pa	0.001 kPa	0.000101971 mH_2O
1 kPa	0.01 bar	10 mbar	1000 Pa	1 kPa	0.101971 mH_2O
1 bar	1 bar	1000 mbar	100000 Pa	100 kPa	10.1971 mH_2O
1 mbar	0.001 bar	1 mbar	100 Pa	0.1 kPa	0.0101971 mH_2O
1 mH_2O	0.0980665 bar	98.0665 mbar	9806.65 Pa	9.80665 kPa	1 mH_2O

(GB) General notes

Our "General Terms and Conditions for Business" together with the "General Conditions for the Supply of Products and Services of the Electrical and Electronics Industry" (ZVEI conditions) including supplementary clause "Extended Retention of Title" apply as the exclusive terms and conditions.

In additionIn addition, the following points are to be observed:

- These instructions must be read before installation and putting in operation and all notes provided therein are to be regarded!
- Devices must only be connected to safety extra-low voltage and under dead-voltage condition. To avoid damages and errors the device (e.g. by voltage induction) shielded cables are to be used, laying parallel with current-carrying lines is to be avoided, and EMC directives are to be observed.
- This device shall only be used for its intended purpose. Respective safety regulations issued by the VDE, the states, their control authorities, the TÜV and the local energy supply company must be observed. The purchaser has to adhere to the building and safety regulations and has to prevent perils of any kind.
- No warranties or liabilities will be assumed for defects and damages arising from improper use of this device.
- Consequential damages caused by a fault in this device are excluded from warranty or liability.
- These devices must be installed by authorised specialists only.
- The technical data and connecting conditions of the mounting and operating instructions delivered together with the device are exclusively valid. Deviations from the catalogue representation are not explicitly mentioned and are possible in terms of technical progress and continuous improvement of our products.
- In case of any modifications made by the user, all warranty claims are forfeited.
- This device must not be installed close to heat sources (e.g. radiators) or be exposed to their heat flow. Direct sun irradiation or heat irradiation by similar sources (powerful lamps, halogen spotlights) must absolutely be avoided.
- Operating this device close to other devices that do not comply with EMC directives may influence functionality.
- This device must not be used for monitoring applications, which serve the purpose of protecting persons against hazards or injury, or as an EMERGENCY STOP switch for systems or machinery, or for any other similar safety-relevant purposes.
- Dimensions of enclosures or enclosure accessories may show slight tolerances on the specifications provided in these instructions.
- Modifications of these records are not permitted.
- In case of a complaint, only complete devices returned in original packing will be accepted.

These instructions must be read before installation and putting in operation and all notes provided therein are to be regarded!

Maßzeichnung **DS 1-MW-L**
Dimensional drawing
Plan coté
Габаритный чертеж

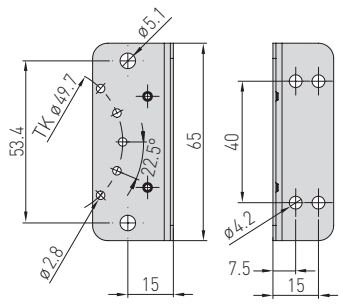

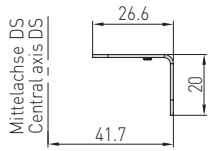

DS 1-MW-L
Montagewinkel
Mounting angle
Equerre de montage
Монтажный уголок

Maßzeichnung **DS 1-MW-U**
Dimensional drawing
Plan coté
Габаритный чертеж

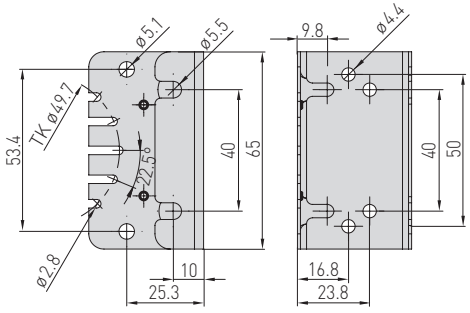

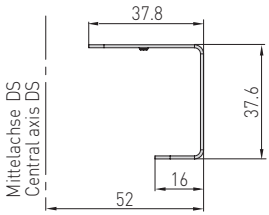

DS 1-MW-U
Montagewinkel
Mounting angle
Equerre de montage
Монтажный уголок

© Copyright by S+S Regeltechnik GmbH

Nachdruck, auch auszugsweise, nur mit Genehmigung von S+S Regeltechnik GmbH gestattet.
Reprints, in part or in total, are only permitted with the approval of S+S Regeltechnik GmbH.
La reproduction des textes même partielle est uniquement autorisée après accord de la société S+S Regeltechnik GmbH.
Перепечатка, в том числе в сокращенном виде, разрешается лишь с согласия S+S Regeltechnik GmbH.

Irrtümer und technische Änderungen vorbehalten.
Errors and technical changes excepted.
Sous réserve d'erreurs et de modifications techniques.
Возможны ошибки и технические изменения.

Ⓓ ⒼⒷ Ⓕ Ⓡⓤ

Zubehör
Accessories
Accessoires
Принадлежности

S+S REGELTECHNIK

Maßzeichnung **DS1-MW-Z**
Dimensional drawing
Plan coté
Габаритный чертеж

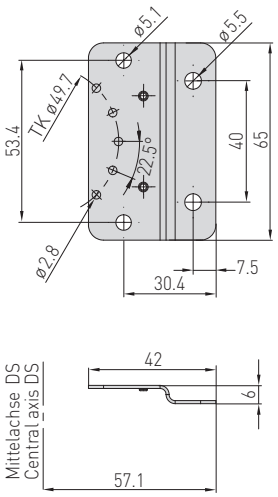

Maßzeichnung **ASD-06**
Dimensional drawing
Plan coté
Габаритный чертеж

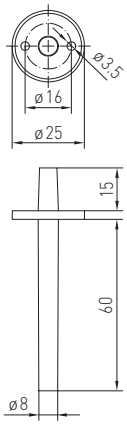

Maßzeichnung **ASD-07**
Dimensional drawing
Plan coté
Габаритный чертеж

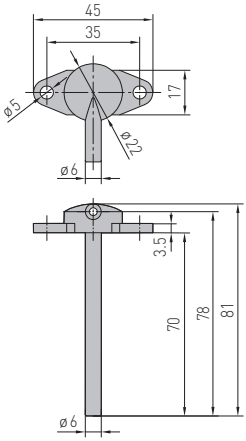

ASD-06
Anschluss-Set
Connection set
Kit de raccordement
Комплект соединительных деталей

ASD-07
Anschlussnippel
Connection nipple
embouts de raccordement
Соединительный нипель

DS1-MW-Z
Montagewinkel
Mounting angle
Equerre de montage
Монтажный уголок

WS-04

Wetter- und Sonnenschutz (optional)

Weather and sun protection hood (optional)

Protection contre les intempéries et le soleil (en option)

Приспособление для защиты от непогоды и солнечных лучей (опция)